ACOUSTI-PHONIC with Piezo Volume and Mid/Dark Tone Switch

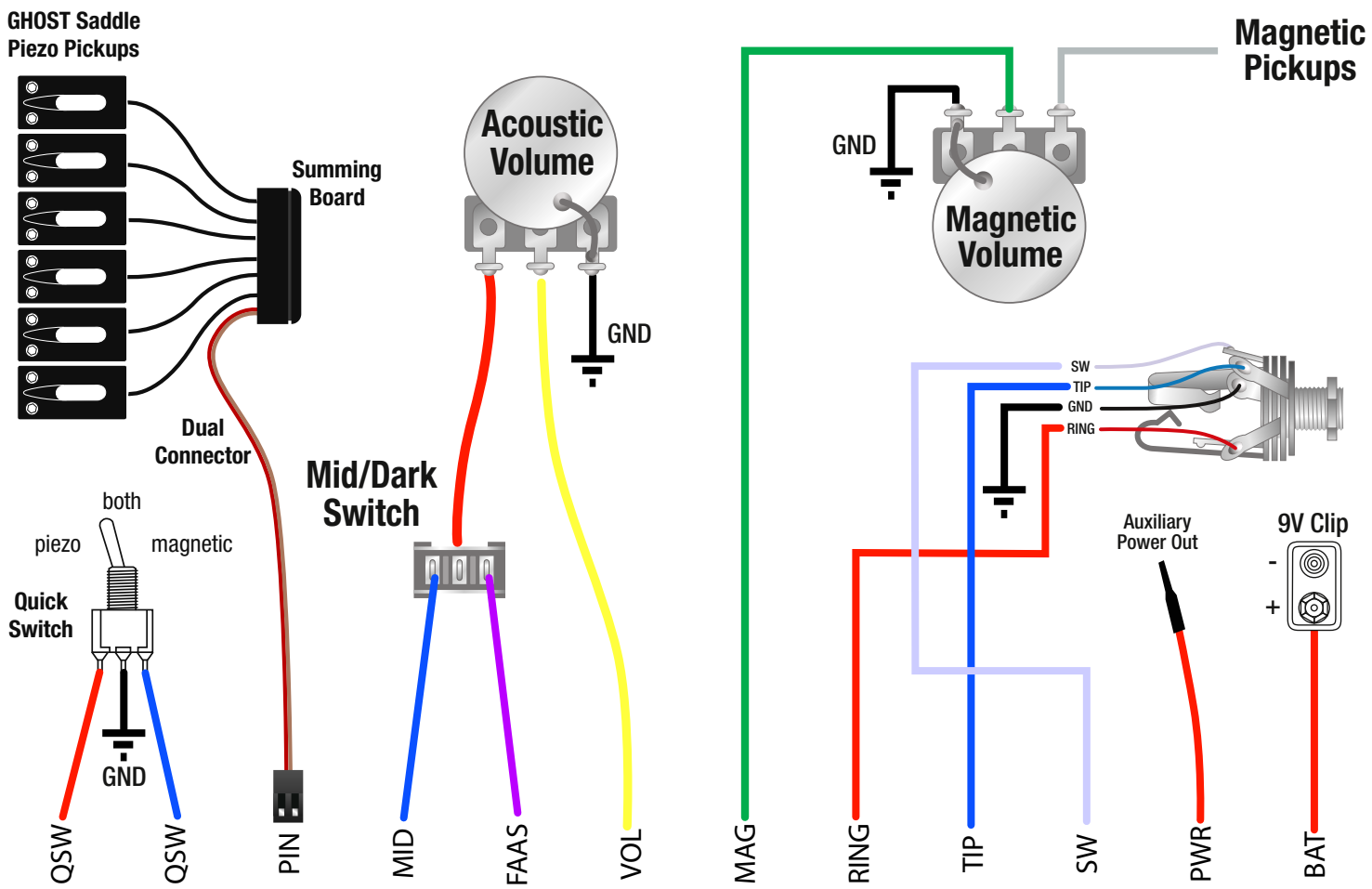
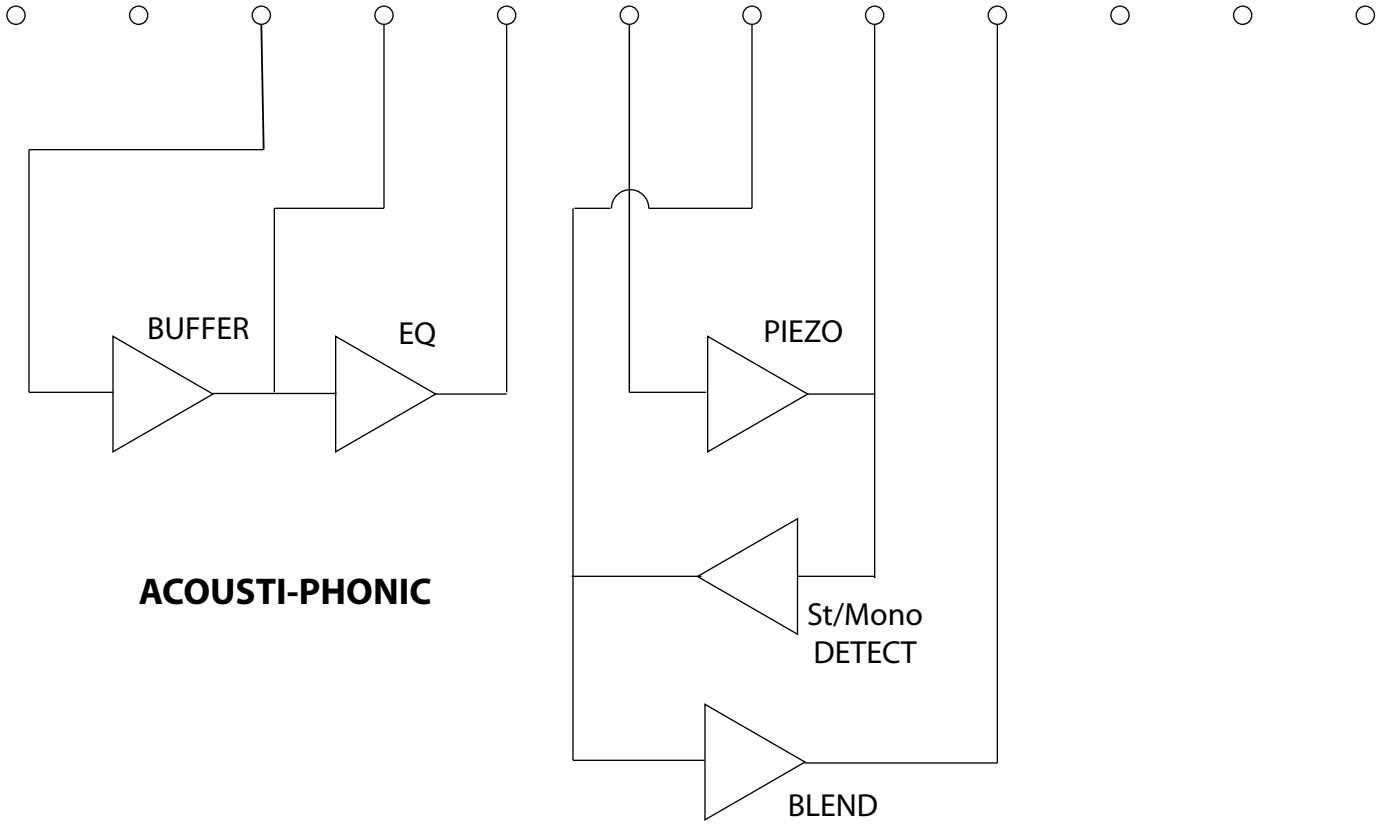
signal through-pins on Acousti-Phonic board (ground pins not shown)